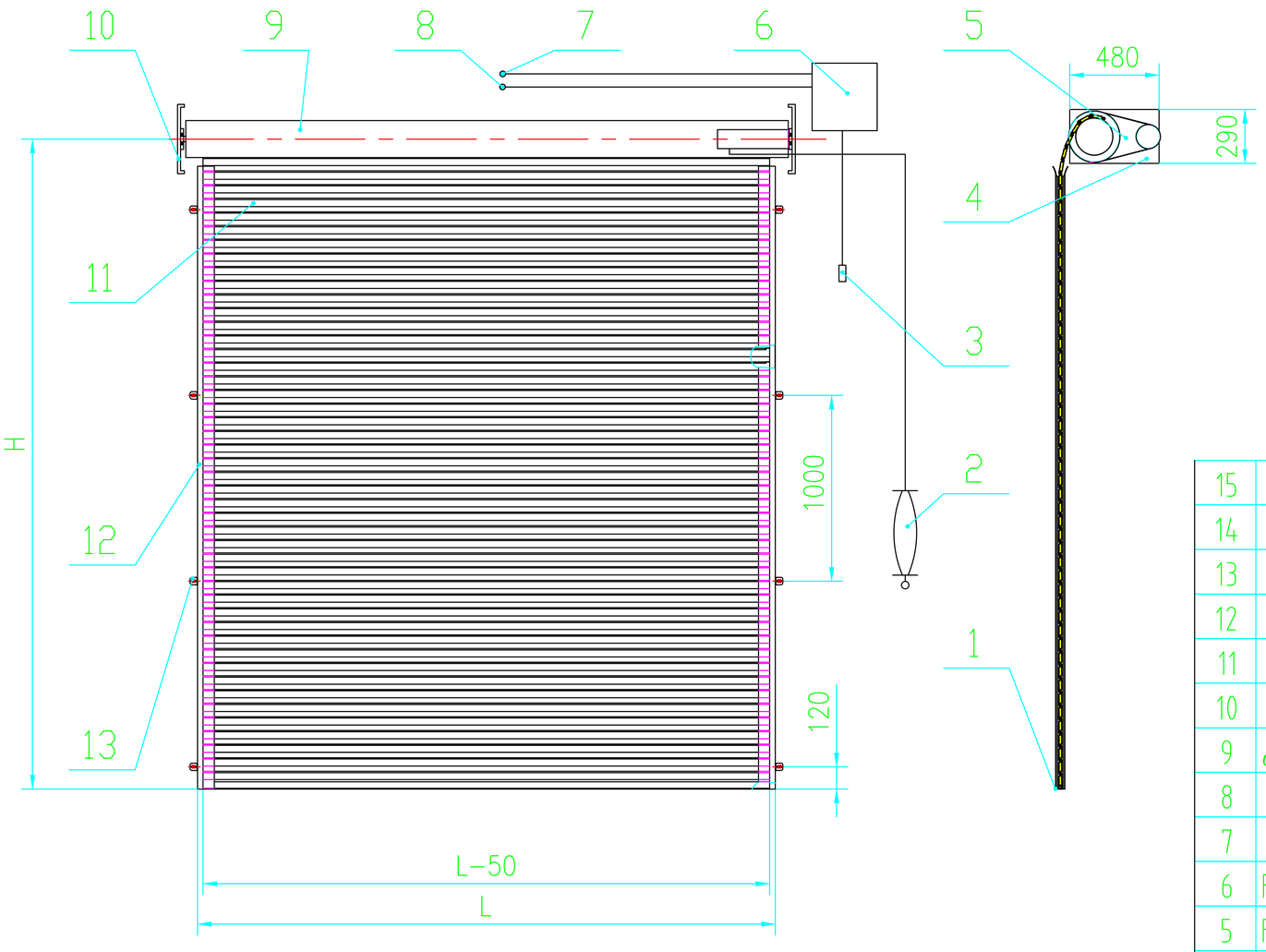

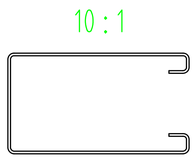

Guide rail

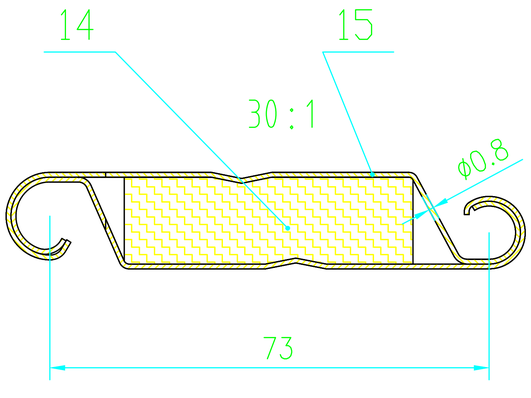

Galvanized composite curtain

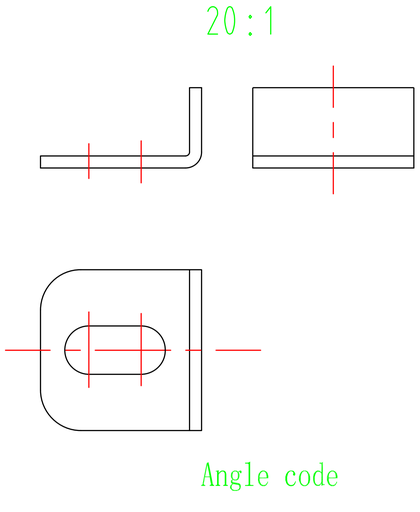

Angle code

NO.	code name	name	quantity	materials	piece weight	total weight	remark
15		galvanized sheet					δ0.8
14		fire-proof material		aluminium silicate fibre			
13		Angle code	H/500	Q235			δ3
12		guide rail	2	Q235			
11		Fire shutter door panel	1	Galvanized composite curtain			(H+400)/73
10		end plate	1	Q235			290X290X4
9	δ=114X2.5welded pipe	reel	1	Q235			
8		Temperature sensor	1				
7		Smoke detector	1				
6	FJK-SD-SX2000, 2K	control box	1				
5	FJJ 225-3P-(400)0.18KW	Fireproof door rolling machine	1				
4		end plate	1	Q235			480X290X4
3		button box	1				
2		Temperature control release device	1				
1		bottom beam		angle iron 40X40			L=3050

remark

GFJ-300300-F3-C_z-D-80

Weight	proportion
1456	1:30

YUOU DOORS